TERRE
NERE

TERRENERE 150x150 SINK CLOSED METAL HD

PRODUCT CODE

K.150150.SCM.HD

DESCRIPTION

Outdoor kitchen. Can be equipped with BBQ, induction and gas cooktop, grill, teppanyaki, gas burners, fridge and freezer.

MATERIALS

Structure and cladding panels made of brushed AISI 304 stainless steel, liquid-painted with a textured acrylic finish.
Metal hardware, tap and mixer, feet in AISI 316 stainless steel.
Cladding sandwich panels and front panels drawer made of AISI 304 stainless steel sheet, internally reinforced with honeycomb aluminum panels.
Top in concrete, protected with water-based resin coatings.

WEIGHT

640 kg

DIMENSION
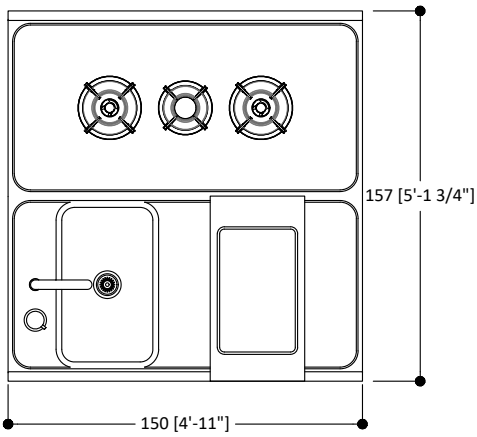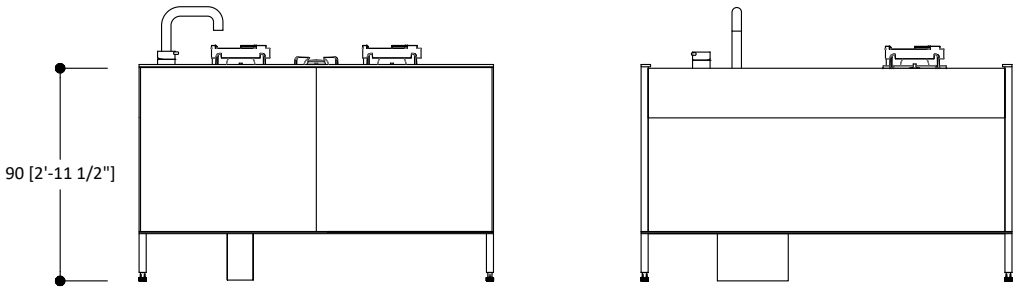
L 150 cm x D 150 cm x H 90 cm - 59.06 in x 59.06 in x 35.43 in